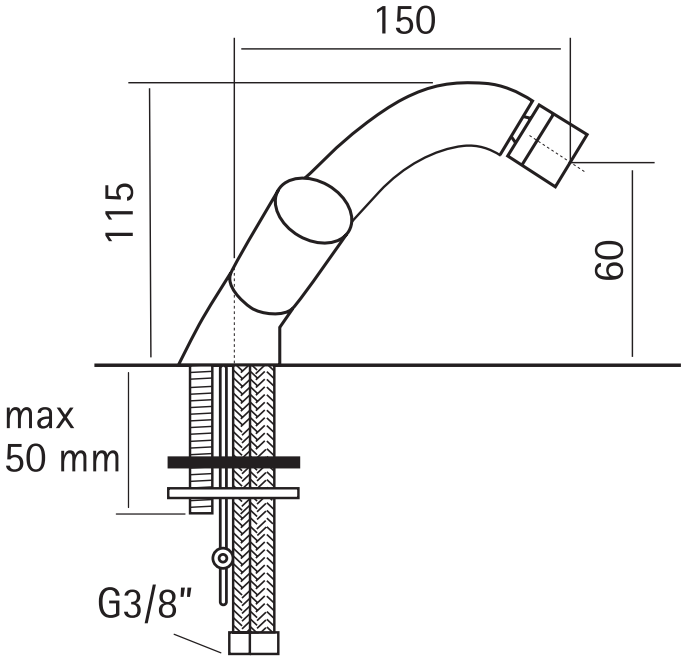
150
115
60
max
50 mm
G3/8"